# Single-Phase Series AC Circuits

**Dr.S.Suresh, B.Sc.,B.E.,M.E.,PhD**

**Assistant Professor (Selection Grade)/EEE**

**B S Abdur Rahman Crescent Institute of Science and Technology, Vandalur, Chennai-48**

# Purely resistive a.c. circuit

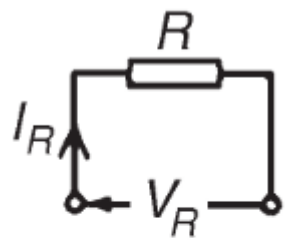


CIRCUIT DIAGRAM

PHASOR DIAGRAM

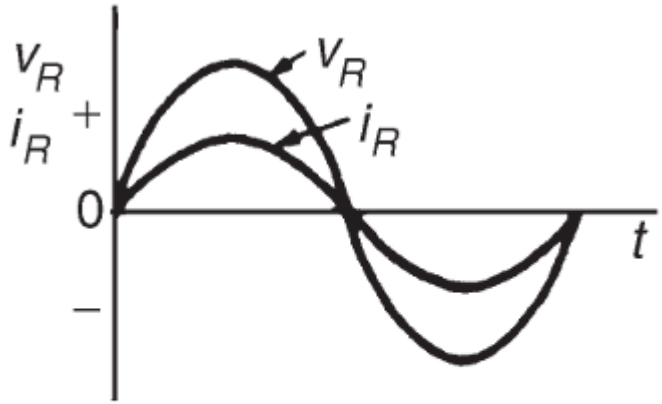


CURRENT AND VOLTAGE WAVEFORMS

# Purely inductive a.c. circuit

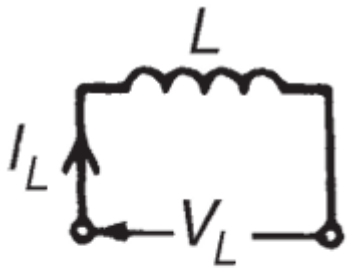


CIRCUIT DIAGRAM

$I_L$ lags $V_L$ by 90°

PHASOR DIAGRAM

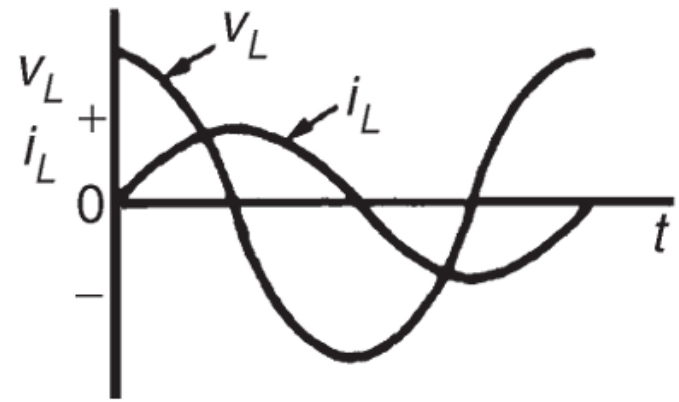


CURRENT AND VOLTAGE WAVEFORMS

**inductive reactance, $X_L$**

$$X_L = \frac{V_L}{I_L} = 2\pi f L \ \Omega$$

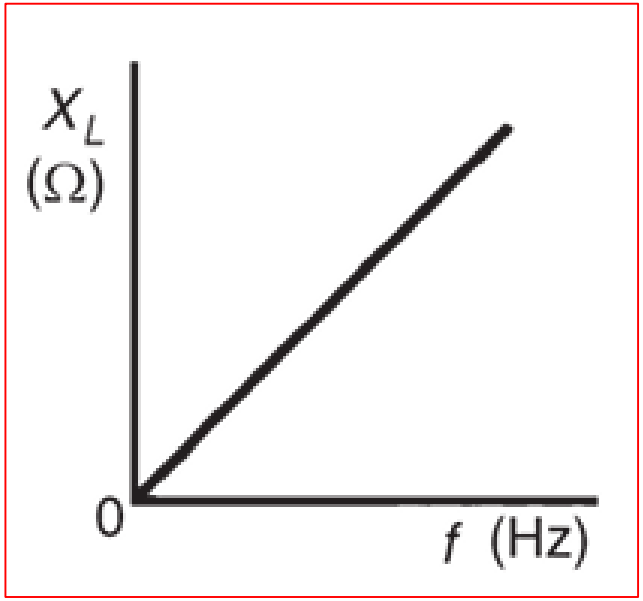

Problem 1. (a) Calculate the reactance of a coil of inductance 0.32 H when it is connected to a 50 Hz supply. (b) A coil has a reactance of 124 Ω in a circuit with a supply of frequency 5 kHz. Determine the inductance of the coil.

(a) Inductive reactance, $X_L = 2\pi f L = 2\pi(50)(0.32) = \mathbf{100.5\ \Omega}$

(b) Since $X_L = 2\pi f L$, inductance $L = \dfrac{X_L}{2\pi f} = \dfrac{124}{2\pi(5000)}\text{H} = \mathbf{3.95\ mH}$

Problem 2. A coil has an inductance of 40 mH and negligible resistance. Calculate its inductive reactance and the resulting current if connected to (a) a 240 V, 50 Hz supply, and (b) a 100 V, 1 kHz supply.

(a) Inductive reactance, $X_L = 2\pi f L = 2\pi(50)(40 \times 10^{-3}) = \mathbf{12.57\ \Omega}$

$$\text{Current, } I = \frac{V}{X_L} = \frac{240}{12.57} = \mathbf{19.09\ A}$$

(b) Inductive reactance, $X_L = 2\pi(1000)(40 \times 10^{-3}) = \mathbf{251.3\ \Omega}$

$$\text{Current, } I = \frac{V}{X_L} = \frac{100}{251.3} = \mathbf{0.398\ A}$$

# Purely capacitive a.c. circuit

**capacitive reactance, $X_C$**

$$X_C = \frac{V_C}{I_C} = \frac{1}{2\pi fC}$$

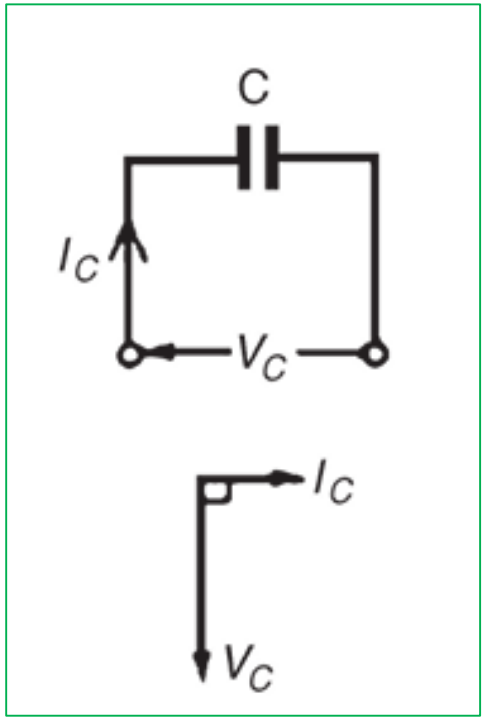


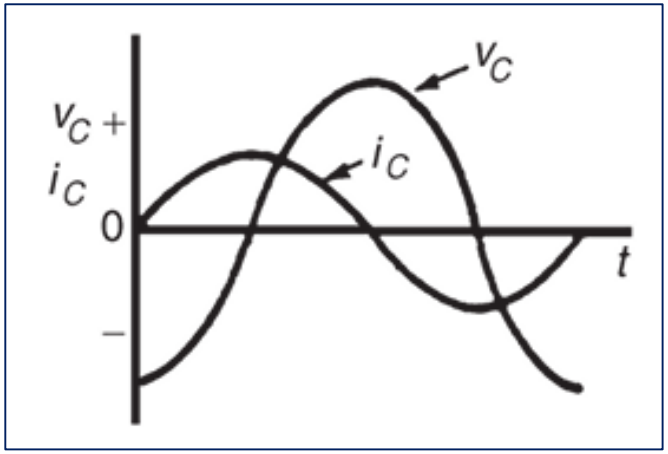


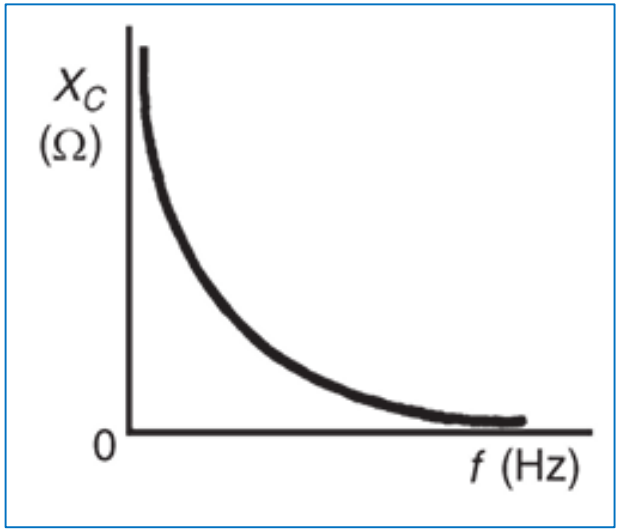

Problem 4. A capacitor has a reactance of 40 Ω when operated on a 50 Hz supply. Determine the value of its capacitance.

Since $X_C = \dfrac{1}{2\pi f C}$, capacitance $C = \dfrac{1}{2\pi f X_C} = \dfrac{1}{2\pi(50)(40)}$ F

$$= \frac{10^6}{2\pi(50)(40)}\ \mu\text{F} = \mathbf{79.58\ \mu F}$$

Problem 5. Calculate the current taken by a 23 μF capacitor when connected to a 240 V, 50 Hz supply.

Current $I = \dfrac{V}{X_C} = \dfrac{V}{\left(\dfrac{1}{2\pi f C}\right)} = 2\pi f C V = 2\pi(50)(23 \times 10^{-6})(240)$

$$= \mathbf{1.73\ A}$$

# RL SERIES CIRCUIT

Figure 2.14 shows RL series circuit. Here, resistor and inductor are connected in series.

where R = Resistance in Ω

L = Inductance in Henry

I = Current flowing in RL series circuit

V = Input voltage

$V_R$ = voltage drop across R = IR

$V_L$ = Voltage drop across L = $IX_L$

$X_L$ = Inductive reactance in Ω = $2\pi fL$

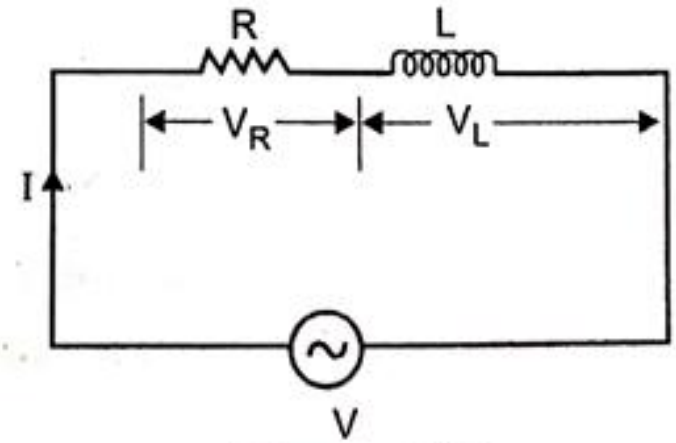


*Figure 2.14*

# RL SERIES CIRCUIT

First we consider, resistor only. In a resistive circuit, $V_R$ and I are inphase. This is shown in figure 2.15.

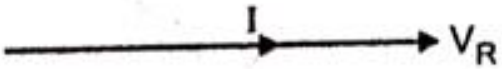


***Figure 2.15***

Secondly we consider, inductor only. Here, current I is said to be lagging by 90° with respect to $V_L$. It is shown in figure 2.16.

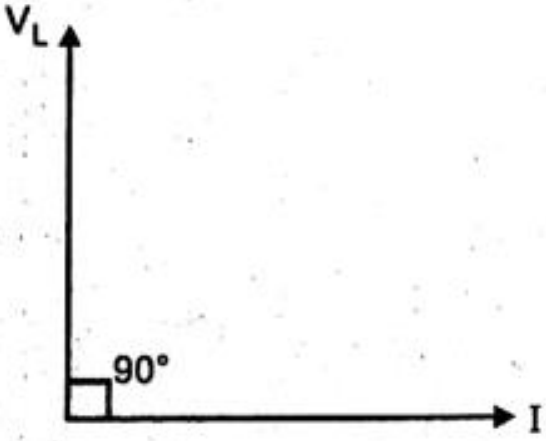


***Figure 2.16***

# RL SERIES CIRCUIT

Combining these two figure (2.15) and (2.16), we can get phasor diagram for RL series circuit. It is shown in figure 2.17.

Impendance $Z = R + jX_L$

$$= \sqrt{R^2 + X_L^2}$$

$$Z = \frac{V}{I}$$

Phase angle $\phi = \tan^{-1}\frac{X_L}{R}$

Power factor = $\cos\phi$ (lag) = $\frac{R}{Z}$

Apparent power $S = VI$

Real Power $P = VI\cos\phi = S\cos\phi$

Reactive Power $Q = VI\sin\phi = S\sin\phi$

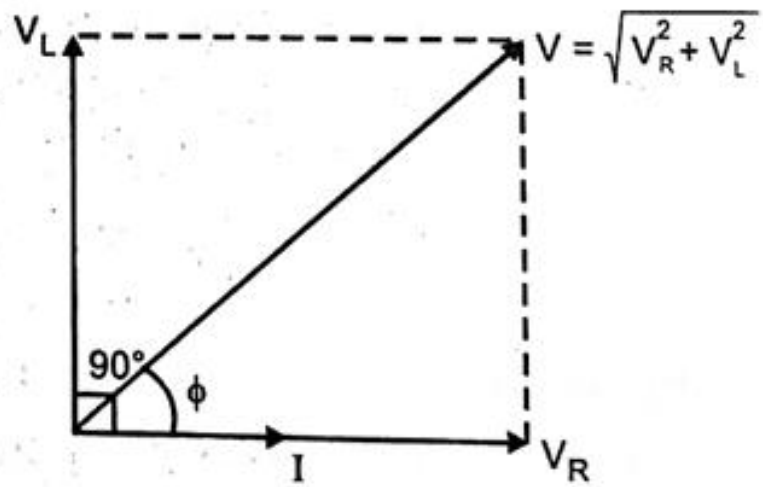


*Figure 2.17*

# RC SERIES CIRCUIT

Figure 2.18 shows RC series circuit. Here, resistor and capacitor are connected in series.

where

$R$ = Resistance in $\Omega$

$C$ = Capacitance in F

$I$ = Current flowing through the RC circuit

$V$ = Input voltage

$V_R$ = Voltage drop across resistance = $IR$

$V_C$ = Voltage drop across capacitance = $IX_C$

$X_C = \dfrac{1}{2\pi fC}$ = Capacitive reactance

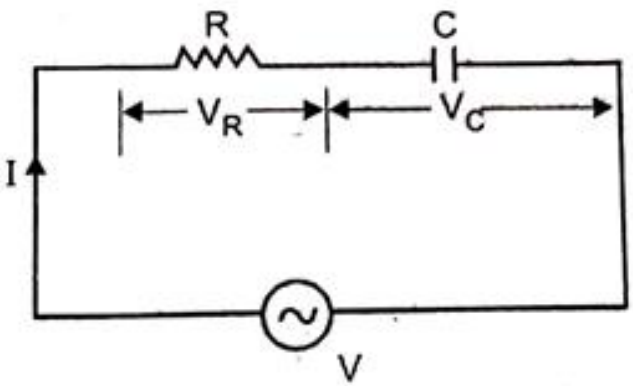


*Figure 2.18*

First, we consider resistor only. In a resistor, $V_R$ and I are in phase. It is shown in figure 2.19.

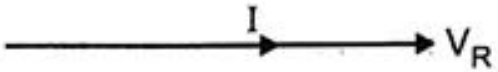


*Figure 2.19*

Secondly, we consider capacitor only. Here, current I is said to be leading by 90° with respect to $V_C$. It is shown in figure 2.20.

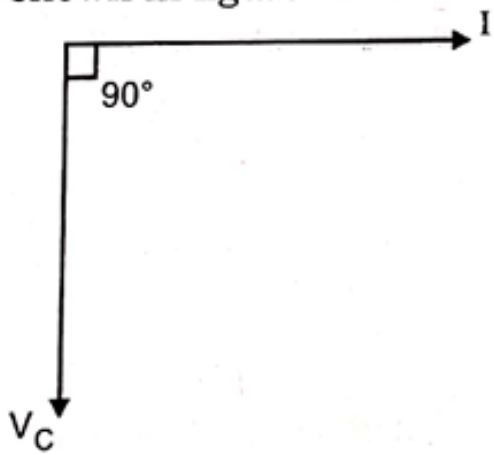


***Figure 2.20***

Combining these two figures (2.19) and (2.20), we can get phasor diagram for RC series circuit. It is shown in figure 2.21.

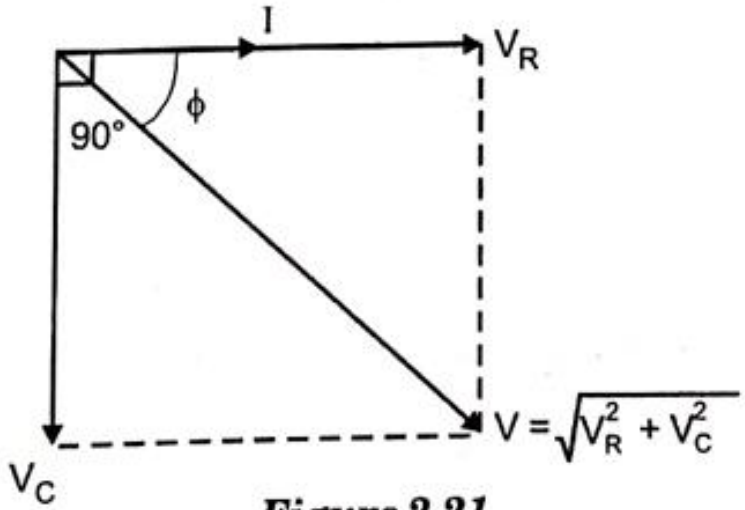


***Figure 2.21***

# RC SERIES CIRCUIT

In this RC circuit,

Impedance $Z = R + (-jX_c) = \sqrt{R^2 + X_C^2}$

Phase angle $\phi = \tan^{-1}\frac{X_C}{R}$ (lead)

Power factor $= \cos\phi = \frac{R}{Z}$

Apparent power $S = VI$

Real power $P = VI\cos\phi$

Reactive power $Q = VI\sin\phi$

# RLC SERIES CIRCUIT

Consider the circuit in figure 2.22. Let the current be $i = I_m \sin \omega t$ or $I\angle 0°$. Then we know

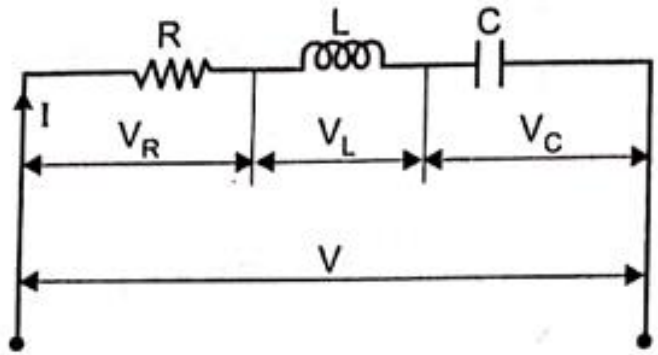


***Figure 2.22***

$V_R$, the rms voltage across R = $IR\angle 0°$

$V_L$, the rms voltage across L = $IX_L\angle 90° = jIX_L$

$V_C$, the rms voltage across C = $IX_C\angle -90° = -jIX_C$

The total rms voltage (rms) $V = V_R + V_L + V_C$

This summation is not arithmetic, but phasorial

Hence $V = IR + jIX_L + (-jIX_C)$

$= I(R + j(X_L - X_C))$

# RLC SERIES CIRCUIT

When this is compared with the basic Ohm's law equation in chapter 1, it is at once clear that the quantity $[R + j(X_L - X_C)]$ must be something similar to resistance. This is called the impedance of the circuit and is given the symbol Z.

$$Z = R + j(X_L - X_C)\ \Omega \qquad \text{... (31)}$$

Converting to the polar form, Z can be written in magnitude and angle form.

$$Z = |Z| \angle \phi \qquad \text{... (32)}$$

Where

$$|Z| = \sqrt{R^2 + (X_L - X_C)^2} \qquad \text{... (33)}$$

and

$$\phi = \tan^{-1} \frac{(X_L - X_C)}{R} \qquad \text{... (34)}$$

It is clear that, if I is given, then

$$V = IZ \qquad \text{... (35)}$$

and if V were given

$$I = \frac{V}{Z} \qquad \text{... (36)}$$

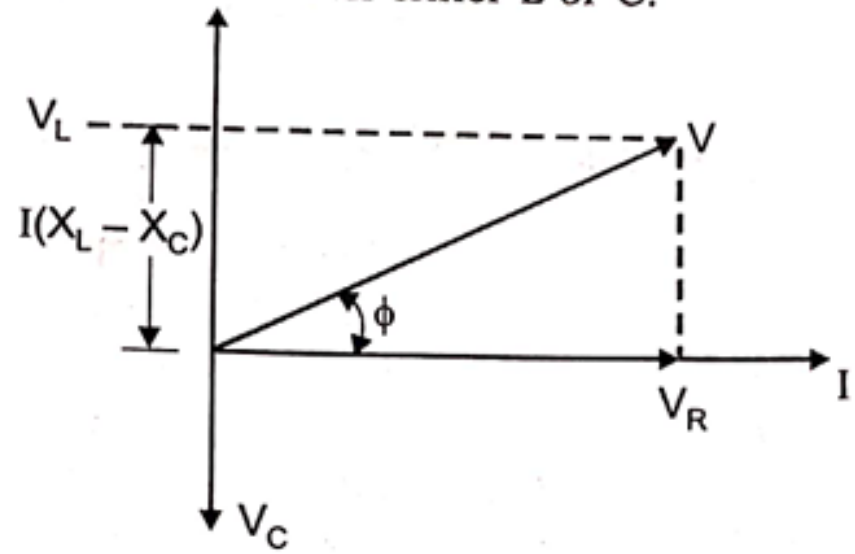


*Figure 2.23*

Hence power in the circuit $= |I|^2 R$

$$= \frac{|V|^2}{|Z|^2} R = |V| \frac{|V|}{|Z|} \frac{R}{|Z|}$$

$$= |V|\,|I| \cos\phi \qquad \ldots (37)$$

as $$\cos\phi = \frac{R}{\sqrt{R^2 + (X_L - X_C)^2}}$$

Power may be calculated as $\dfrac{|V_R|^2}{R}$